THIS DRAWING IS UNPUBLISHED. RELEASED FOR PUBLICATION 20
© COPYRIGHT 20 BY TYCO ELECTRONICS CORPORATION. ALL RIGHTS RESERVED.

PART NUMBER	REV	TERMINATOR	FEED TYPE	DESCRIPTION
2114127-1	C	LEADMAKER	MECH POST FEED	CUTS CARRIER
2114127-2	C	BENCH	MECH PRE FEED	CUTS CARRIER
2114127-6	C	LEADMAKER	MECH POST FEED	CONTINUOUS CARRIER
7-2114127-1	C	LEADMAKER	MECH POST FEED	-1 AND SPARE PARTS
7-2114127-2	C	BENCH	MECH PRE FEED	-2 AND SPARE PARTS
7-2114127-6	C	LEADMAKER	MECH POST FEED	-6 AND SPARE PARTS
7-2114127-7	B	-	-	SPARE PARTS KIT

CRIMP DATA TE TERMINAL TE CRIMP SPECS

TERMINAL NAME: 2.5mm SIGNAL DBL LOCK CONT

CRIMP	SIZE	TYPE	RANGE
WIRE	1.16 [.046 IN]	F	26-22 AWG
INSUL	1.70 [.067 IN]	F	Ø.93 - 1.50 [.037-.059 IN]

WIRE STRIP LENGTH 2.20-2.80 [.087-.110 IN]

APPL INSTRUCTIONS 408-8322

TERMINAL APPL SPEC 114-5203 - - - FEED 8.20 [.323 IN]

TERMINALS APPLIED

RECEPT.	TAB	-	-
917684-1	917765-1	-	-
917684-2	917765-2	-	-
5-917684-1	-	-	-
-	-	-	-

WIRE SIZE	CRIMP HEIGHT	PIN PN & LENGTH [IN]
0.34mm² or 22AWG	.82 ±0.05 [.032 ±.002 IN]	4-354779-6 [.3220]
0.22mm² or 24AWG	.75 ±0.05 [.030 ±.002 IN]	5-354779-1 [.3245]
0.14mm² or 26AWG	.69 ±0.05 [.027 ±.002 IN]	5-354779-6 [.3270]
-	-	
-	-	
-	-	
-	-	
-	-	
-	-	
-	-	
-	-	
-	-	

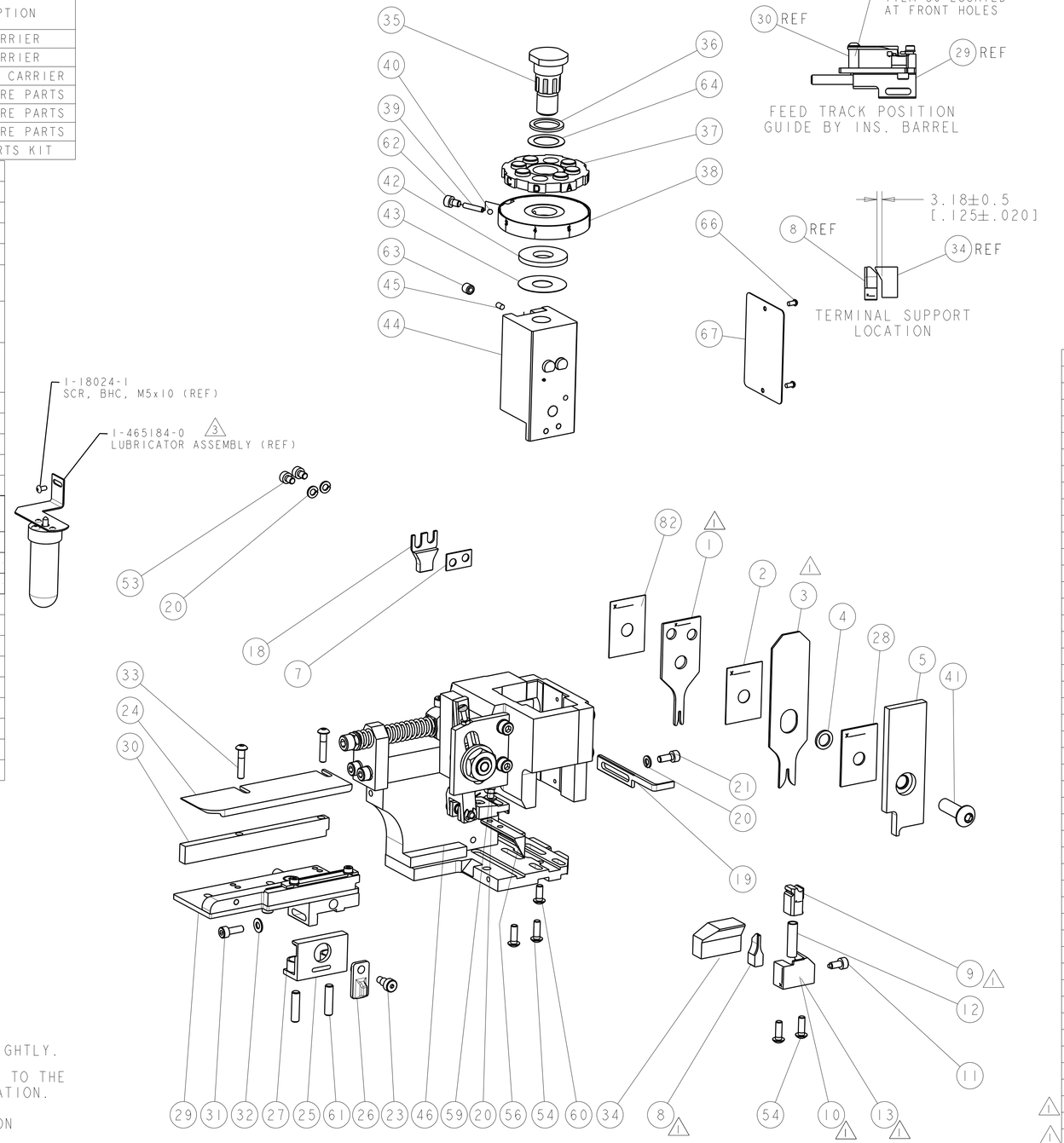

1. RECOMMENDED SPARE PARTS.
2. GREASE RAM, CAM, CAM FOLLOWER AND FEED ROD LIGHTLY.
3. CERTAIN TERMINALS REQUIRE LUBRICATION. REFER TO THE APPLICATOR INSTRUCTION SHEET FOR MORE INFORMATION.
4. LUBRICATE DAILY PER THE APPLICATOR INSTRUCTION SHEET SUPPLIED WITH THE APPLICATOR.

VIEW B ROTATED 180°

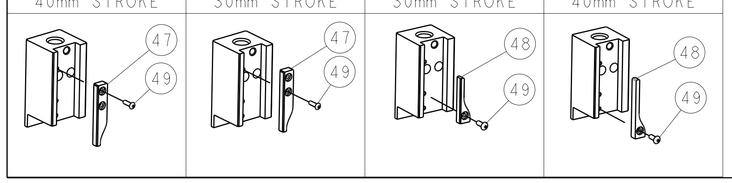

SET UP GAGE 458637-3

LOC	DIST
A	66

REVISIONS

P	LTR	DESCRIPTION	DATE	DWN	APVD
	C	ECR-15-007132	07MAY2015	MR	GB

ITEM NO	DESCRIPTION	PART NO	-77	-76	-72	-71	-6	-2	-1
82	SPACER, CRIMPER	455888-3	-	1	1	1	1	1	1
71	DOCUMENTATION PACKAGE	1338705-1	-	1	1	1	1	1	1
67	PLATE, IDENTIFICATION	461264-1	-	1	1	1	1	1	1
66	SCREW, DRIVE	21017-2	-	2	2	2	2	2	2
64	WASHER, FLAT PRECISION	986950-1	-	1	1	1	1	1	1
63	SCR, SET, CUP POINT M6 X 6.0	3-18031-0	-	1	1	1	1	1	1
62	SCR, SKT HD CAP M4 X 6.0	18023-9	-	1	1	1	1	1	1
61	SCR, SET, FLT POINT M5 X 20.0	2-18032-5	-	2	2	2	2	2	2
60	SCR, BTN SKT HD CAP (M4 X 10.0)	18024-7	-	1	1	1	1	1	1
59	SCR, HEX HD CAP M4 X 8.0	5-18022-2	-	1	1	1	1	1	1
56	PAWL, FEED	1338685-1	-	1	1	1	1	1	1
54	SCR, BTN SKT HD CAP (M4 X 12.0)	18024-8	-	4	4	4	4	4	4
53	SCR, SKT HD CAP M4 X 6.0	18023-9	-	2	2	2	2	2	2
49	SCR, BTN SKT HD CAP (M3 X 10.0)	18024-3	-	1	1	1	1	1	1
48	CAM, UNIVERSAL PRE FEED	1338675-1	-	-	1	-	-	1	-
47	CAM, UNIVERSAL POST-FEED	1338676-1	-	1	-	1	-	1	1
46	APPLICATOR SUBASSEMBLY, HDI	1320999-3	-	1	1	1	1	1	1
45	PLUG,NYLON	690191-1	-	1	1	1	1	1	1
44	RAM, (SIDE FEED)	1633724-1	-	1	1	1	1	1	1
43	SHIM SUB-ASSY	690125-1	-	1	1	1	1	1	1
42	WASHER, RAM (.115)	690124-1	-	1	1	1	1	1	1
41	SCR, BTN SKT HD CAP (M8 X 25.0)	2-18024-6	-	1	1	1	1	1	1
40	BALL, STEEL	23241-1	-	1	1	1	1	1	1
39	SPRING, COMPRESSION	2-22278-7	-	1	1	1	1	1	1
38	DISC, ADJUST, INSULATION CRIMP	1320922-1	-	1	1	1	1	1	1
37	WIRE DISC, ASSEMBLY	354777-1	-	1	1	1	1	1	1
36	SPRING, COMPRESSION	22480-5	-	1	1	1	1	1	1
35	POST, RAM	690212-1	-	1	1	1	1	1	1
34	SUPPORT, TERMINAL	2-1752356-5	-	1	1	1	1	1	1
33	SCR, BTN SKT HD CAP (M4 X 20.0)	1-18024-0	-	2	2	2	2	2	2
32	WASHER, FLAT, REG M4	18027-2	-	1	1	1	1	1	1
31	SCR, SKT HD CAP M4 X 12.0	1-18023-2	-	1	1	1	1	1	1
30	SPACER, STRIP GUIDE	1320908-4	-	1	1	1	1	1	1
29	STRIP GUIDE ASSEMBLY	1633073-1	-	1	1	1	1	1	1
28	SPACER, CRIMPER	1-455888-0	-	1	1	1	1	1	1
27	SPRING, COMPRESSION	1-22284-0	-	2	2	2	2	2	2
26	LEVER, DRAG RELEASE	356835-1	-	1	1	1	1	1	1
25	DRAG, TERMINAL	240792-1	-	1	1	1	1	1	1
24	STRIP GUIDE	1320928-1	-	1	1	1	1	1	1
23	SCR, SKT HD SHLDR 5.0 DIA X 6.0	980371-4	-	1	1	1	1	1	1
21	SCR, SKT HD CAP M4 X 10.0	1-18023-1	-	1	1	1	1	1	1
20	WASHER, SPRG LOCK, REG M4	18025-2	-	4	4	4	4	4	4
19	STRIPPER	690472-6	-	1	1	1	1	1	1
18	HOLD DOWN, TERMINAL	2-690518-6	-	1	1	1	1	1	1
13	SHEAR HOLDER, FRONT	1338684-1	-	1	-	-	1	-	-
12	SPRING, COMPRESSION	3-22280-3	1	1	1	1	1	1	1
11	STOP, SHEAR	356885-4	-	1	1	1	1	1	1
10	SHEAR HOLDER, FRONT, CUT	1320921-1	1	-	1	1	-	1	1
9	FLOATING SHEAR, FRONT	462006-1	1	1	1	1	1	1	1
8	ANVIL, COMBINATION	5-1333200-5	1	1	2	2	1	1	1
7	SPACER	1-240641-9	-	1	1	1	1	1	1
6	-	-	-	-	-	-	-	-	-
5	DEPRESSOR, SHEAR	2-455889-0	-	1	1	1	1	1	1
4	BLOCK, CRIMPER SPACER	2-238011-0	-	1	1	1	1	1	1
3	CRIMPER, INSULATION	1-722557-3	1	2	2	2	1	1	1
2	SPACER, CRIMPER	455888-4	-	1	1	1	1	1	1
1	CRIMPER, WIRE	5-1633609-3	1	2	2	2	1	1	1

THIS DRAWING IS A CONTROLLED DOCUMENT FOR TYCO ELECTRONICS CORPORATION. IT IS SUBJECT TO CHANGE AND THE CONTROLLING ENGINEERING ORGANIZATION SHOULD BE CONTACTED FOR THE LATEST REVISION.

DWN K.HUANG 02AUG2011
CHK 02AUG2011
APVD S.XI 02AUG2011

DIMENSIONS: mm [IN]

TOLERANCES UNLESS OTHERWISE SPECIFIED: 0 PLC ± 1 PLC ± 2 PLC ± 3 PLC ± 4 PLC ± ANGLES ±

MATERIAL - -
FINISH - -

PRODUCT SPEC -
APPLICATION SPEC See Table
WEIGHT -

TE Connectivity
Harrisburg, PA 17105-3608

NAME SIDE FEED HDI APPLICATOR - -

SIZE	CAGE CODE	DRAWING NO	RESTRICTED TO
A1	00779	C-2114127	-

CUSTOMER ACCESSIBLE PRODUCTION DRAWING SCALE 3:5 SHEET 1 OF 1 REV C